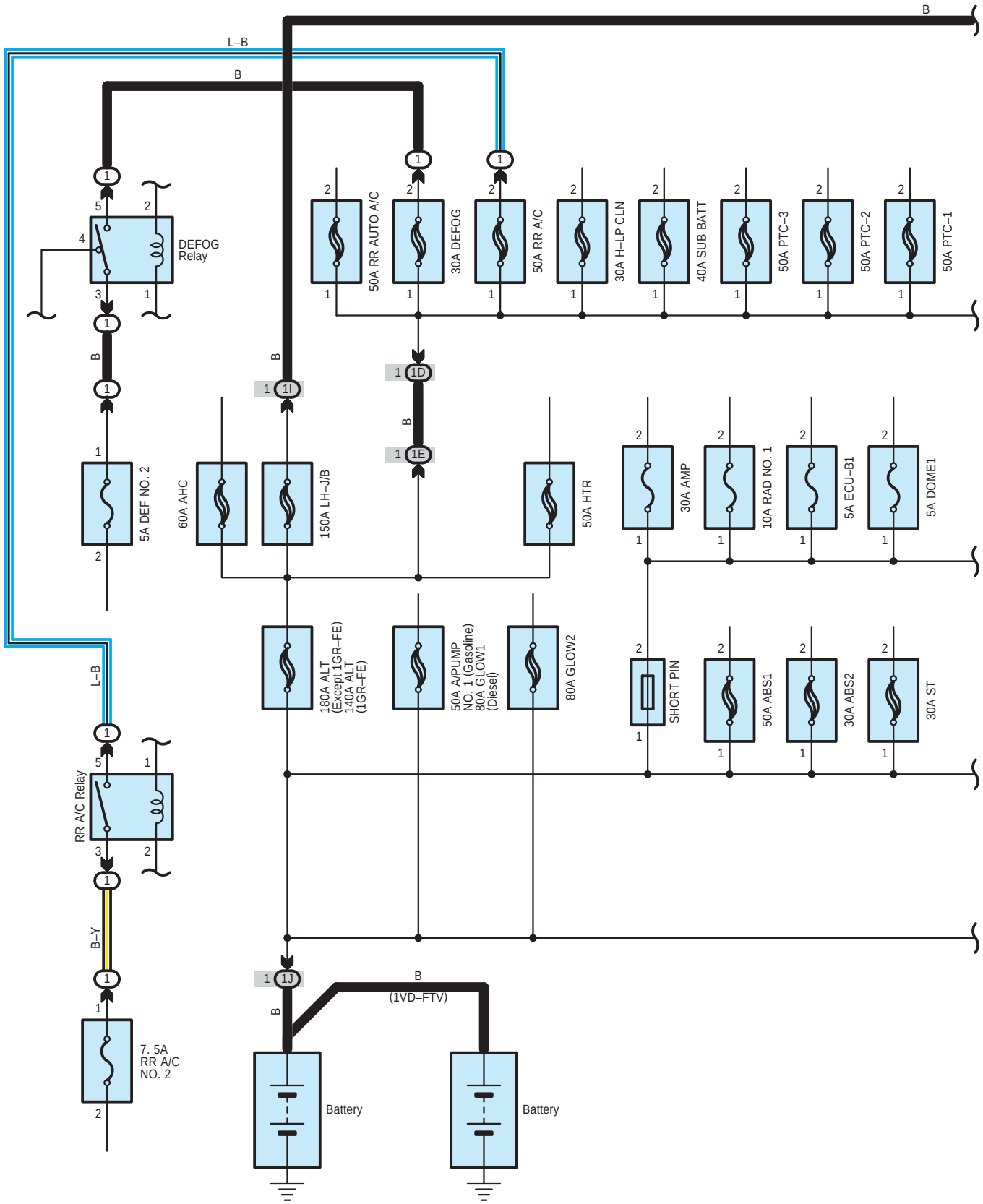
B
L–B
B
DEFOG Relay
50A RR AUTO A/C
30A DEFOG
50A RR A/C
30A H–LP CLN
40A SUB BATT
50A PTC–3
50A PTC–2
50A PTC–1
5A DEF NO. 2
60A AHC
150A LH–J/B
50A HTR
30A AMP
10A RAD NO. 1
5A ECU–B1
5A DOME1
180A ALT (Except 1GR–FE) 140A ALT (1GR–FE)
50A A/PUMP NO. 1 (Gasoline) 80A GLOW1 (Diesel)
80A GLOW2
SHORT PIN
50A ABS1
30A ABS2
30A ST
RR A/C Relay
B–Y
7. 5A RR A/C NO. 2
(1VD–FTV)
Battery
Battery

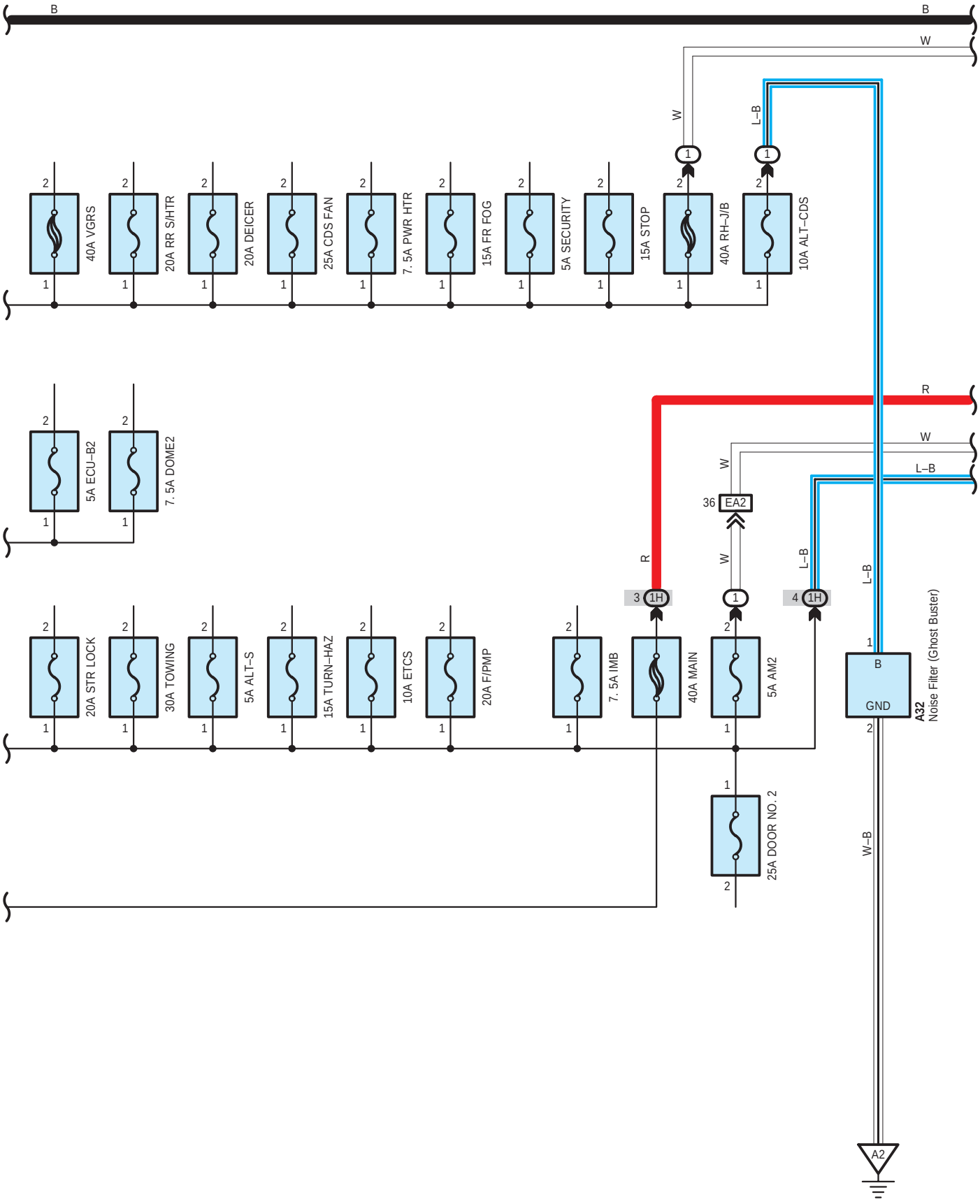
B
B
W
W
L–B
40A VGRS
20A RR S/HTR
20A DEICER
25A CDS FAN
7. 5A PWR HTR
15A FR FOG
5A SECURITY
15A STOP
40A RH–J/B
10A ALT–CDS
5A ECU–B2
7. 5A DOME2
R
W
L–B
36 EA2
3 1H
4 1H
20A STR LOCK
30A TOWING
5A ALT–S
15A TURN–HAZ
10A ETCS
20A F/PMP
7. 5A IMB
40A MAIN
5A AM2
25A DOOR NO. 2
A32
Noise Filter (Ghost Buster)
GND
W–B
A2

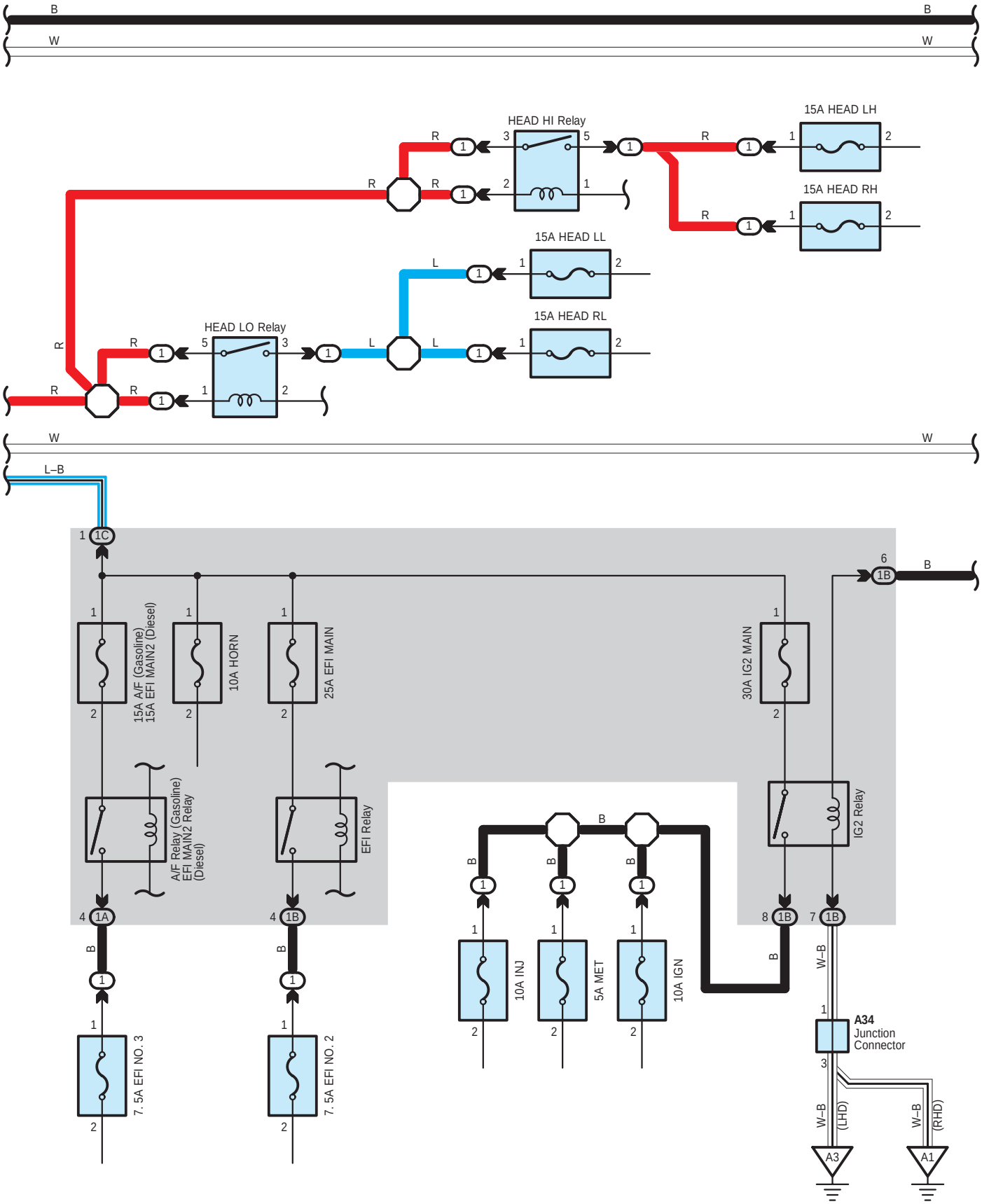
B
W
HEAD HI Relay
15A HEAD LH
15A HEAD RH
15A HEAD LL
15A HEAD RL
HEAD LO Relay
R
L
L–B
1C
1A
1B
15A A/F (Gasoline)
15A EFI MAIN2 (Diesel)
10A HORN
25A EFI MAIN
30A IG2 MAIN
A/F Relay (Gasoline)
EFI MAIN2 Relay
(Diesel)
EFI Relay
IG2 Relay
10A INJ
5A MET
10A IGN
7. 5A EFI NO. 3
7. 5A EFI NO. 2
W–B
A34
Junction
Connector
(LHD)
(RHD)
A3
A1

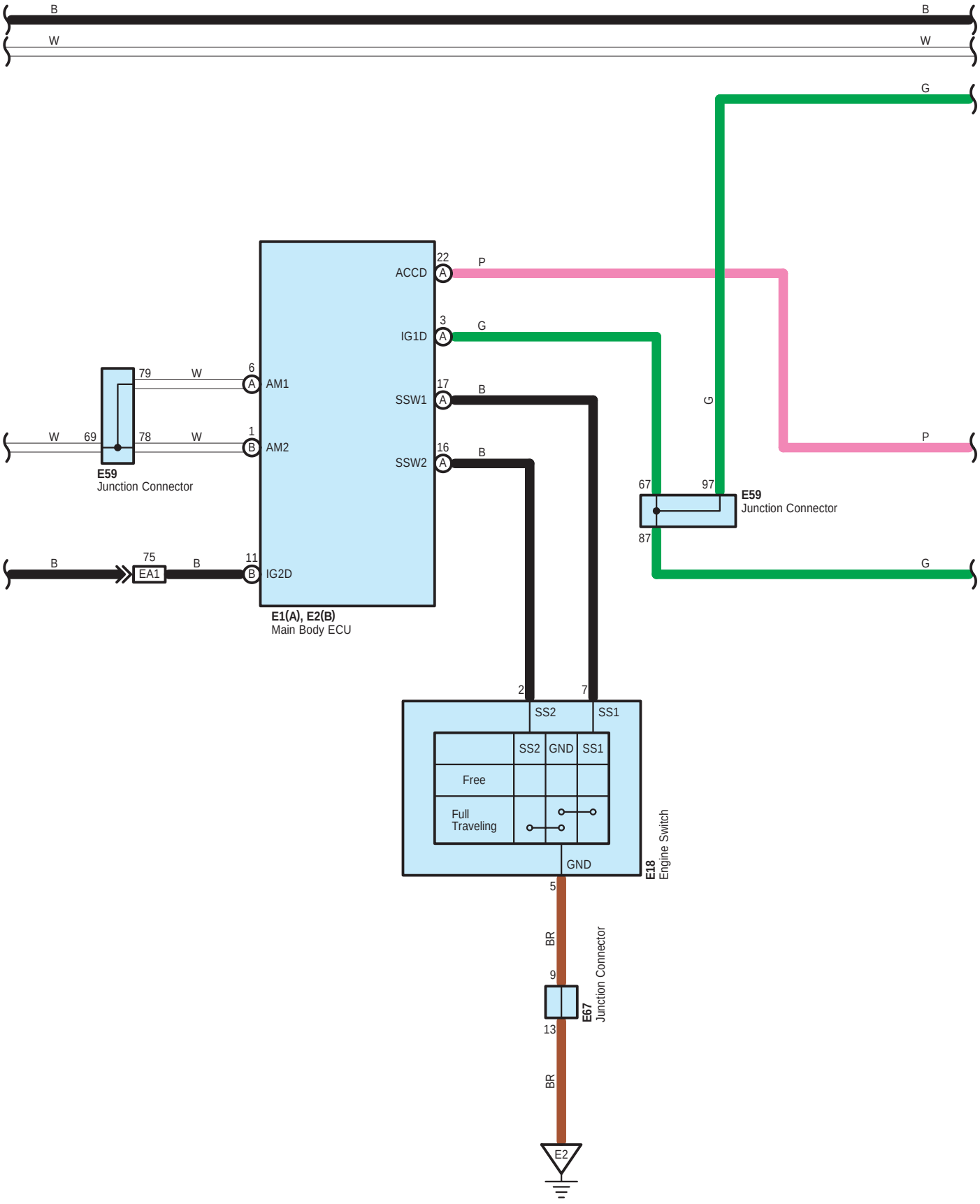
B
W
B
W
G
ACCD
22
A
P
IG1D
3
A
G
SSW1
17
A
B
SSW2
16
A
B
AM1
6
A
AM2
1
B
IG2D
11
B
79
W
W
69
78
W
E59
Junction Connector
B
75
EA1
B
E1(A), E2(B)
Main Body ECU
G
P
67
97
87
E59
Junction Connector
G
2
7
SS2
SS1
SS2
GND
SS1
Free
Full
Traveling
GND
E18
Engine Switch
5
BR
9
13
E67
Junction Connector
BR
E2

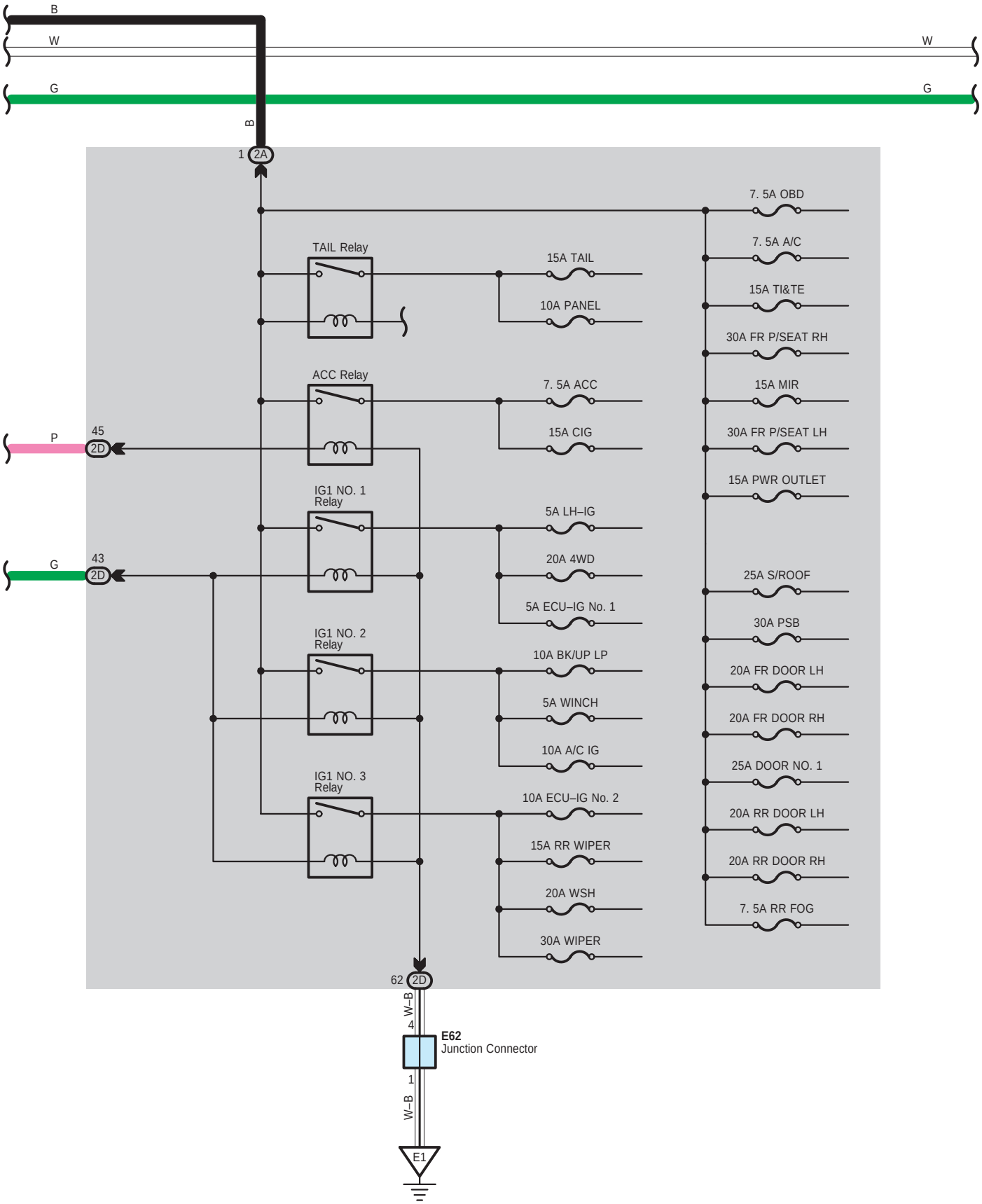
B
W
W
G
G
B
1 2A
7. 5A OBD
TAIL Relay
15A TAIL
7. 5A A/C
10A PANEL
15A TI&TE
30A FR P/SEAT RH
ACC Relay
7. 5A ACC
15A MIR
P
45
2D
15A CIG
30A FR P/SEAT LH
15A PWR OUTLET
IG1 NO. 1 Relay
5A LH–IG
G
43
2D
20A 4WD
25A S/ROOF
5A ECU–IG No. 1
30A PSB
IG1 NO. 2 Relay
10A BK/UP LP
20A FR DOOR LH
5A WINCH
20A FR DOOR RH
10A A/C IG
25A DOOR NO. 1
IG1 NO. 3 Relay
10A ECU–IG No. 2
20A RR DOOR LH
15A RR WIPER
20A RR DOOR RH
20A WSH
7. 5A RR FOG
30A WIPER
62 2D
W–B
4
E62
Junction Connector
1
W–B
E1

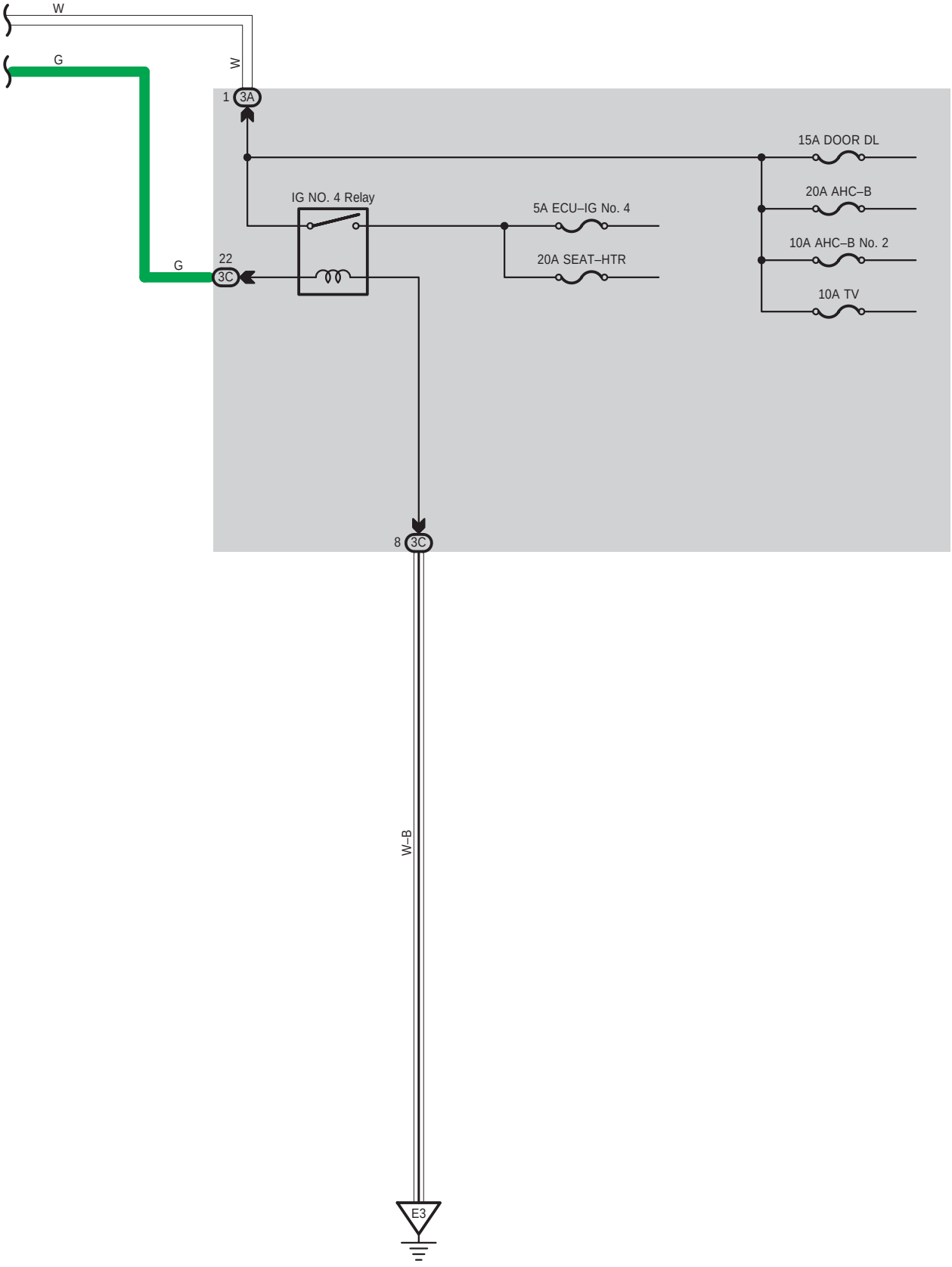
W
G
W
1
3A
15A DOOR DL
IG NO. 4 Relay
5A ECU–IG No. 4
20A AHC–B
10A AHC–B No. 2
20A SEAT–HTR
10A TV
G
22
3C
8
3C
W–B
E3

A 32
Black

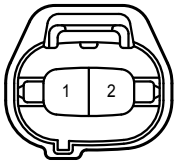

A 34
White

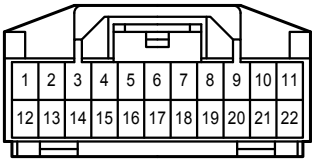

E 1
White

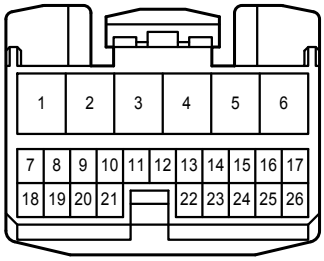

E 2
White

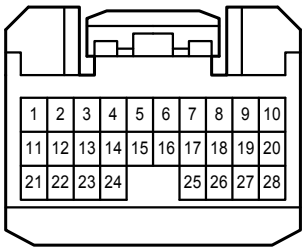

E 18
Black

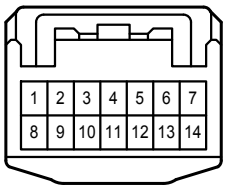

E 59

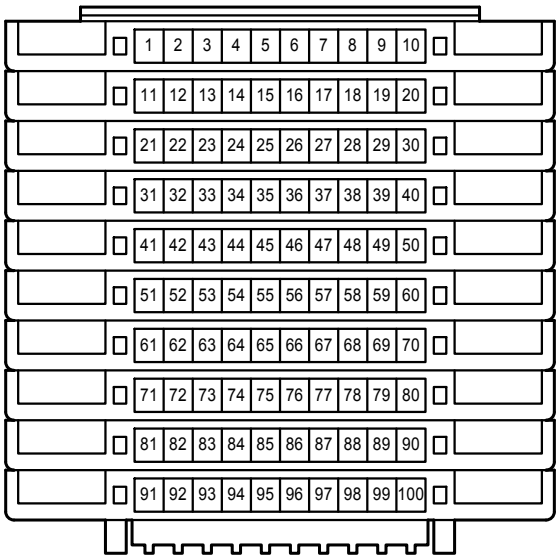

E 62
White

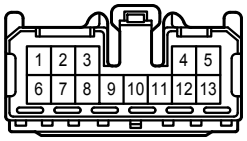

E 67
White

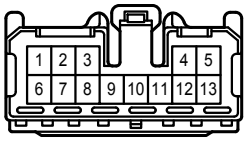

1B
White

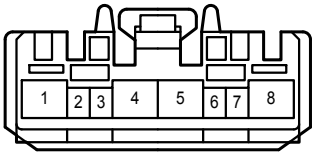

1C
White

1D

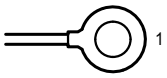

1E

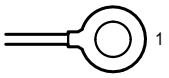

1H
White

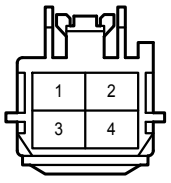

1I

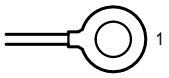

1J

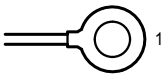

2A
White

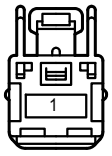

2D
White

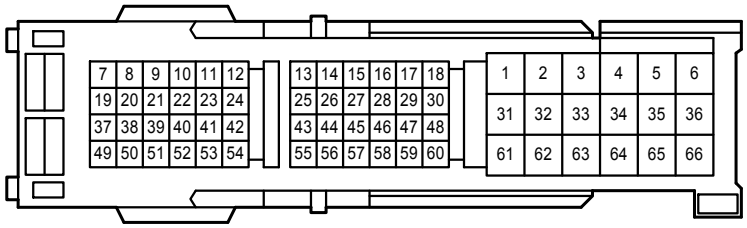

3A
Black

3C
White

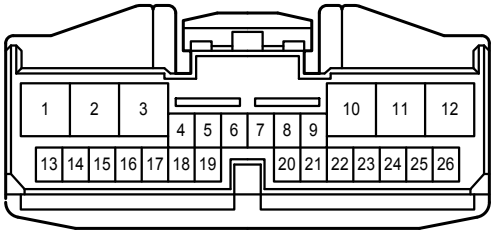

EA1
White

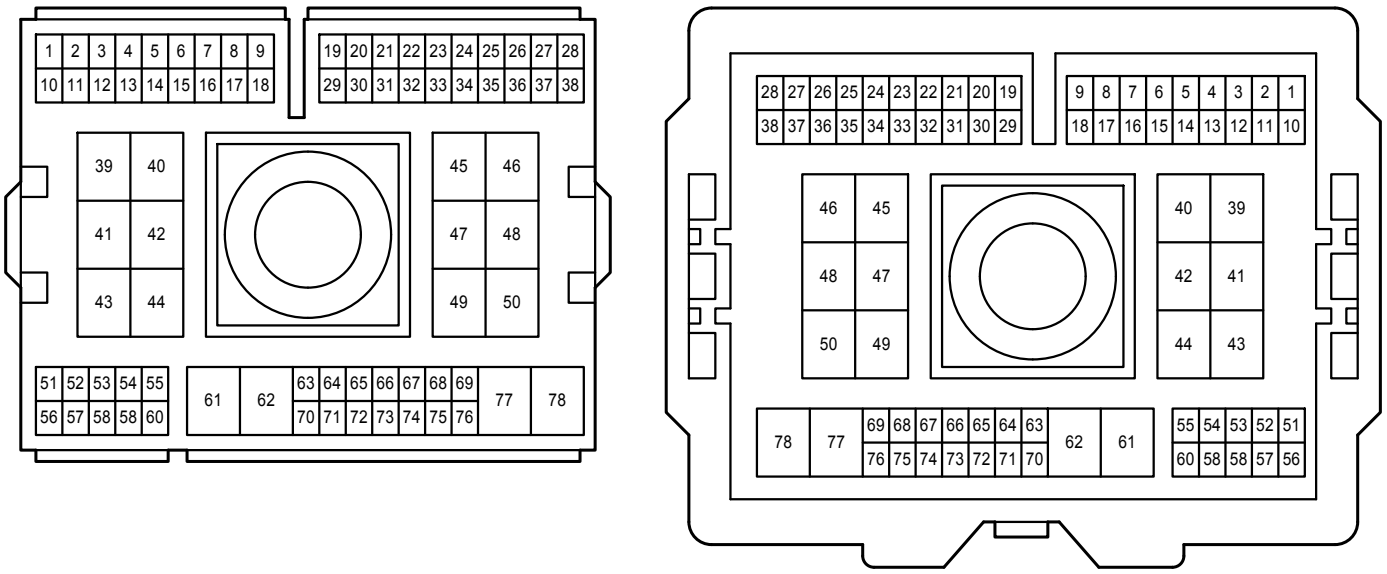
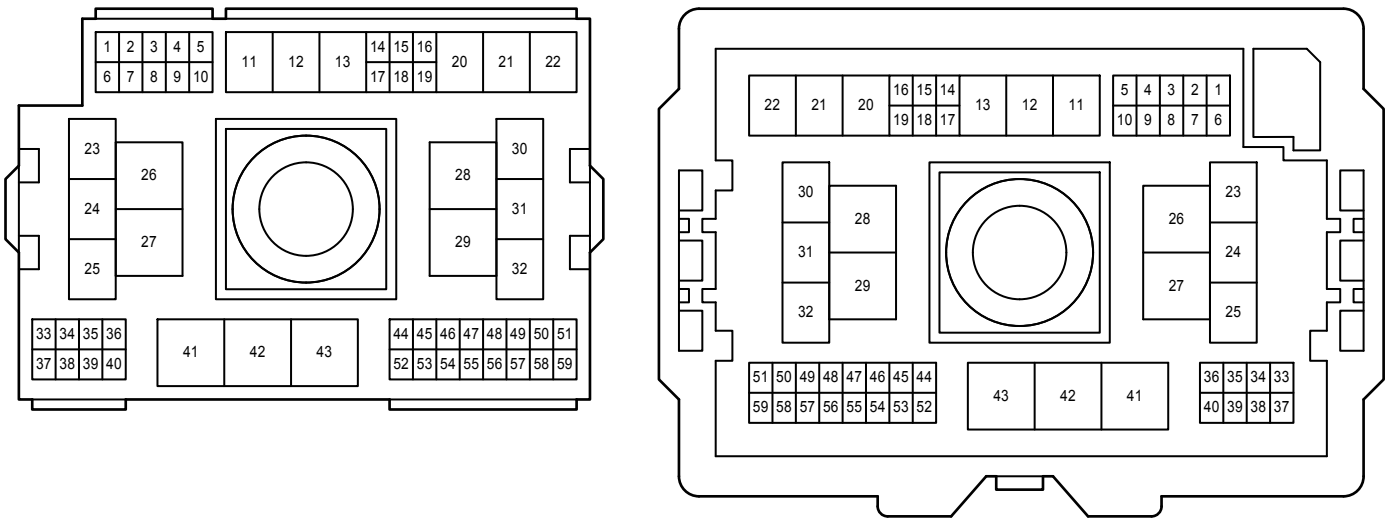
EA2
White Gray